KALFIRE
FIREPLACES

GP311555T

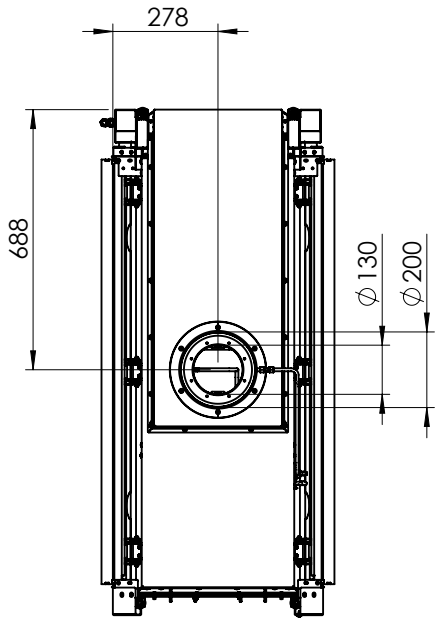

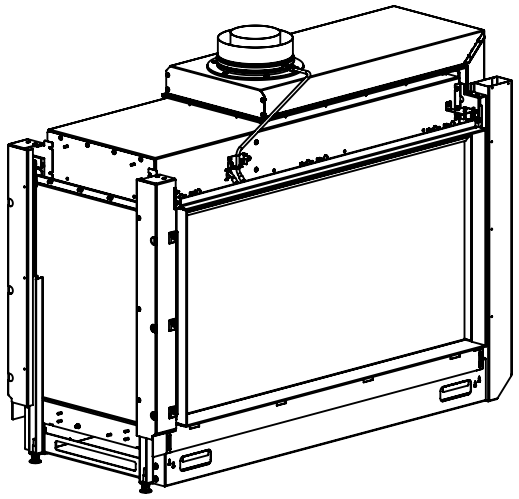

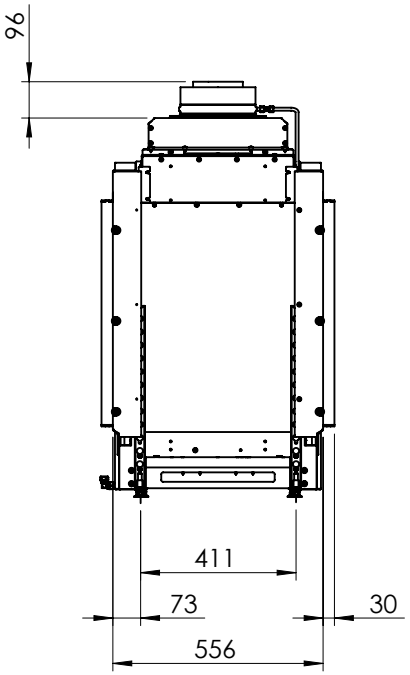

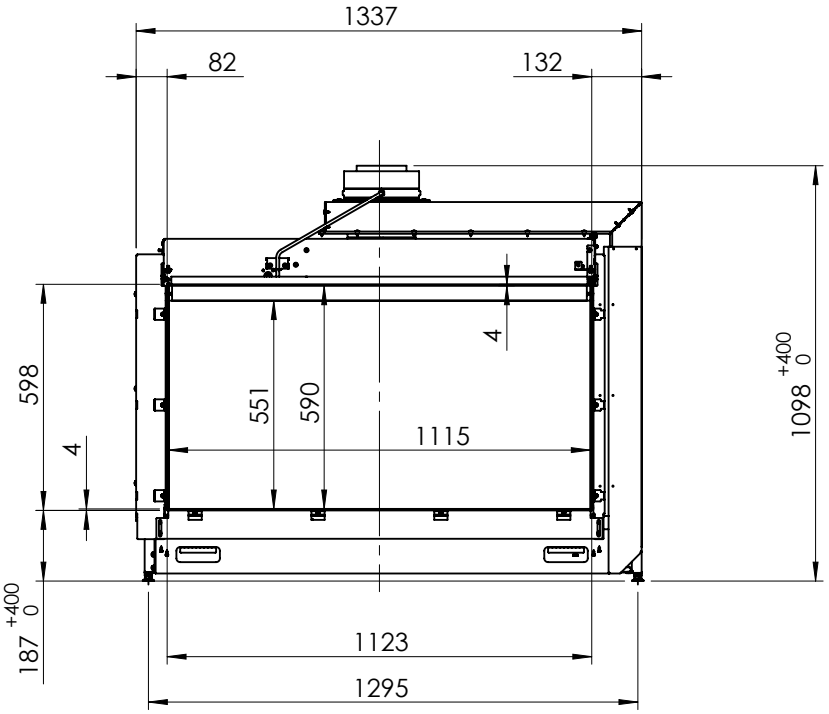

All dimensions in mm. Modifications under reserve. 4-7-2019 sheet 1 / 1

© All rights reserved. This drawing is sole property of Kal-fire. No part of this drawing may be reproduced, or published, in any form or in any way without prior written permission from Kal-fire.