KALFIRE
FIREPLACES

GP85-55S

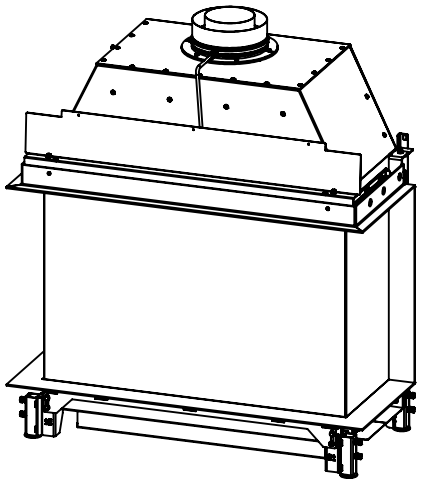

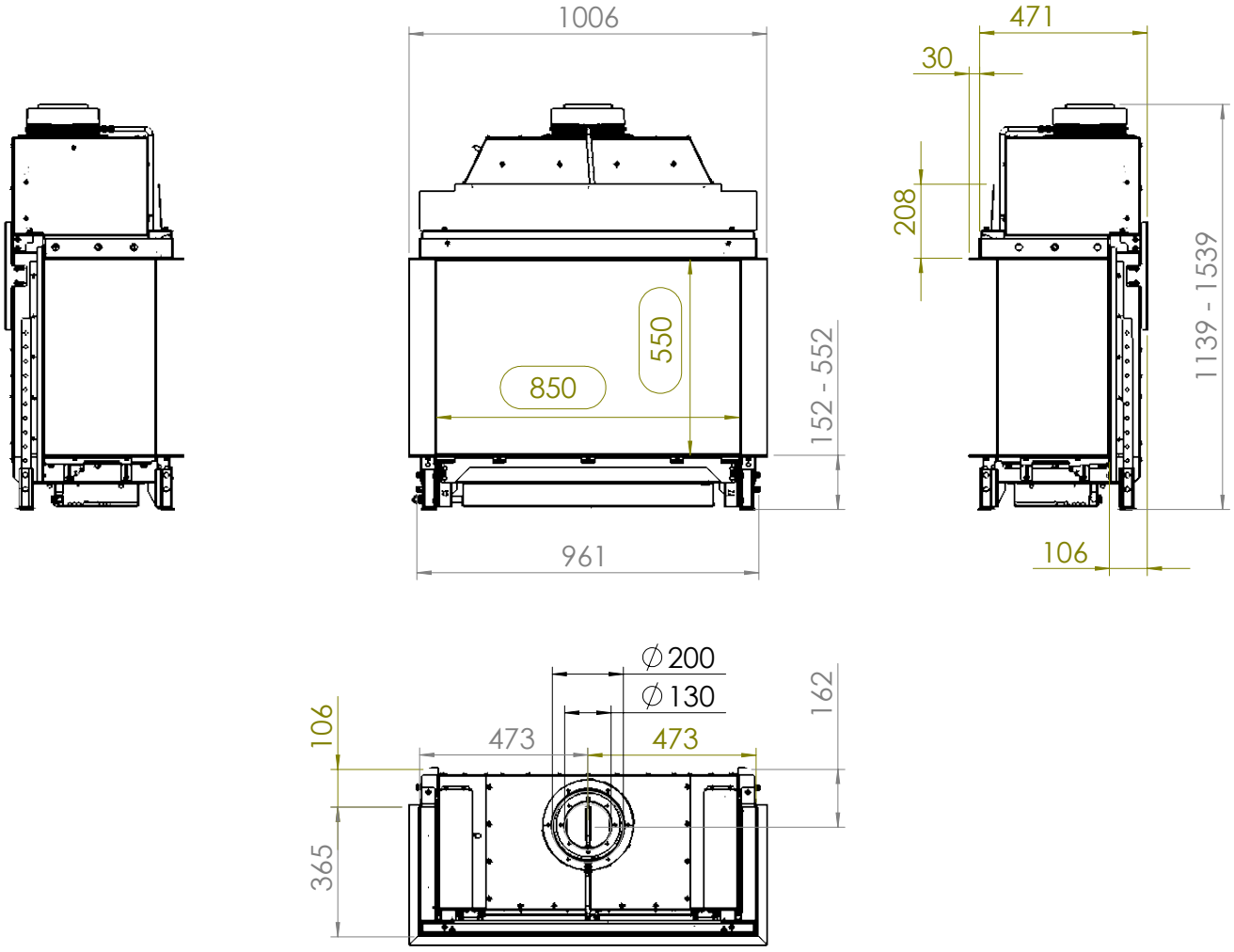

All dimensions in mm. Modifications under reserve.

27-10-2020 sheet 1 / 4

© All rights reserved. This drawing is sole property of Kal-fire. No part of this drawing may be reproduced, or published, in any form or in any way without prior written permission from Kal-fire.

KALFIRE
FIREPLACES

GP85-55S

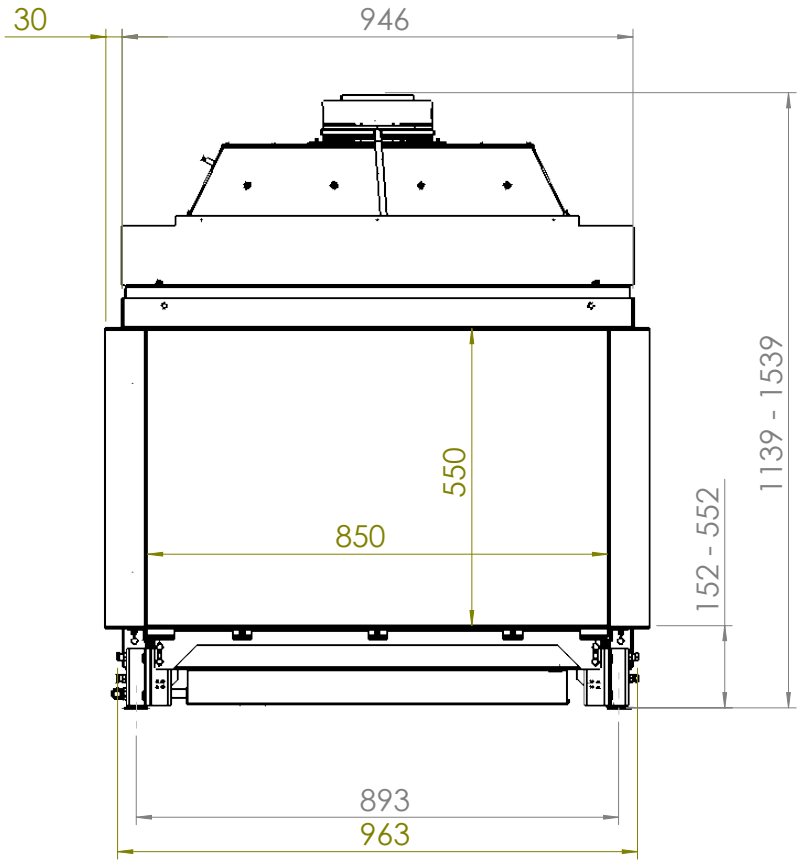

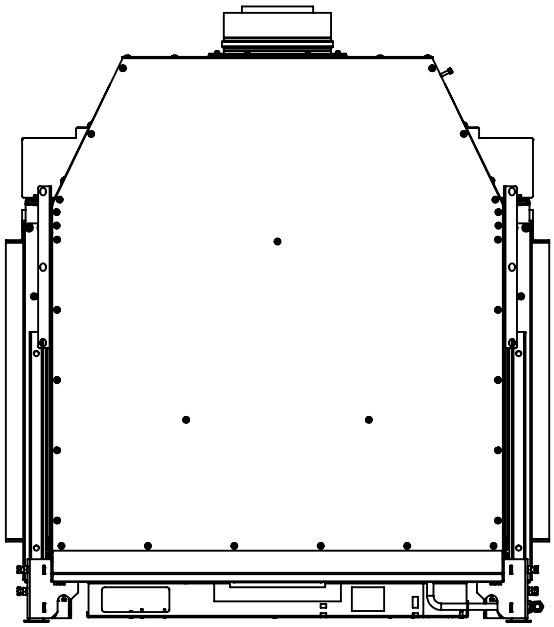

All dimensions in mm. Modifications under reserve.

27-10-2020 sheet 2 / 4

© All rights reserved. This drawing is sole property of Kal-fire. No part of this drawing may be reproduced, or published, in any form or in any way without prior written permission from Kal-fire.

KALFIRE
FIREPLACES

GP85-55S

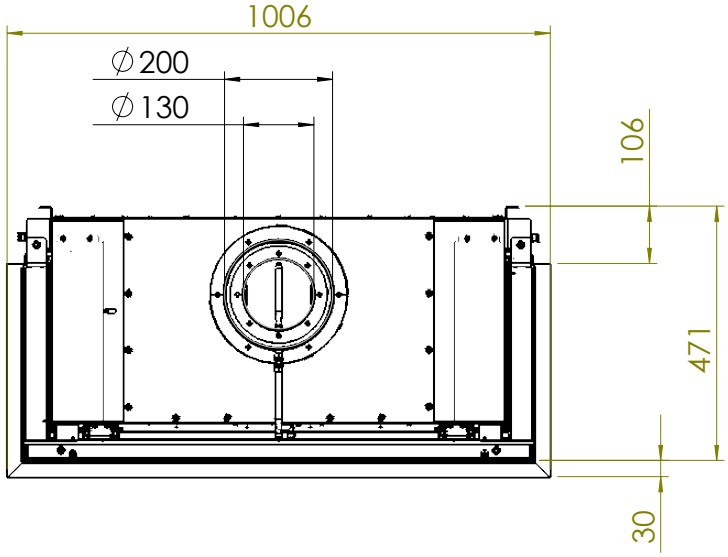

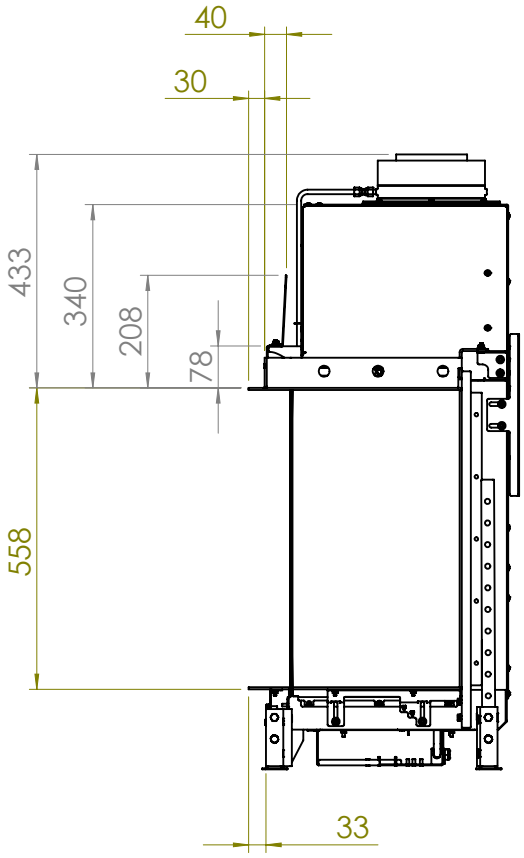

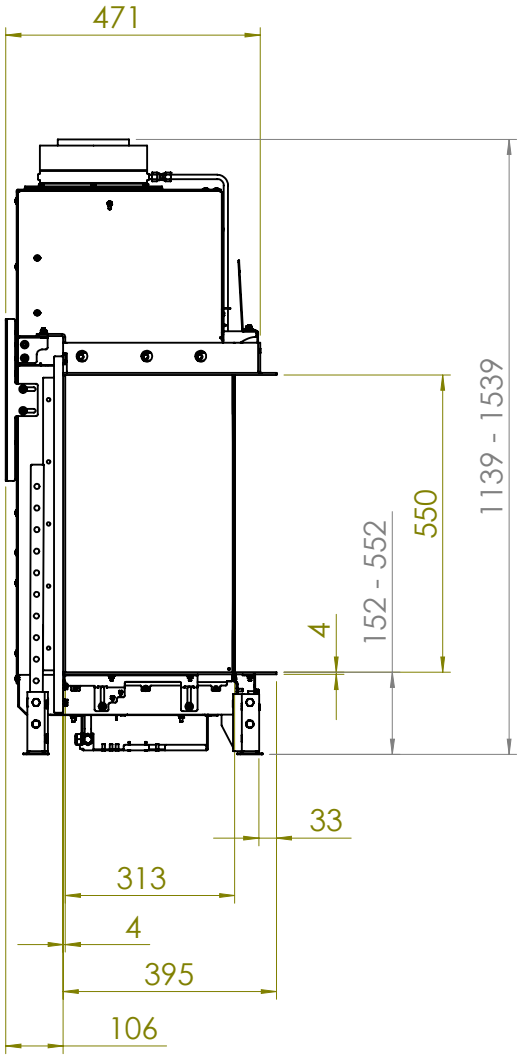

All dimensions in mm. Modifications under reserve.

27-10-2020 sheet 3 / 4

© All rights reserved. This drawing is sole property of Kal-fire. No part of this drawing may be reproduced, or published, in any form or in any way without prior written permission from Kal-fire.

KALFIRE
FIREPLACES

GP85-55S-8mm

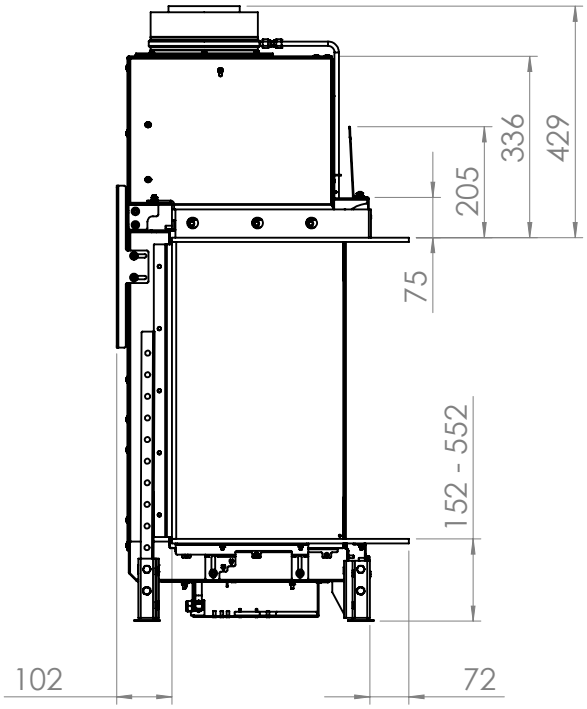

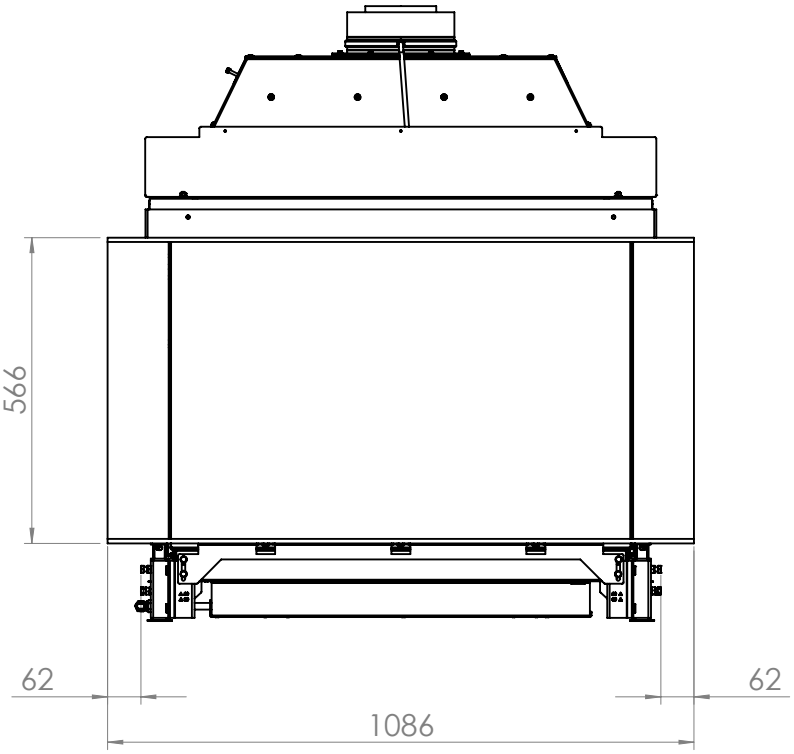

All dimensions in mm. Modifications under reserve. 27-10-2020 sheet 4 / 4

© All rights reserved. This drawing is sole property of Kal-fire. No part of this drawing may be reproduced, or published, in any form or in any way without prior written permission from Kal-fire.