KALFIRE
FIREPLACES

W90 47CR
4mm Kader

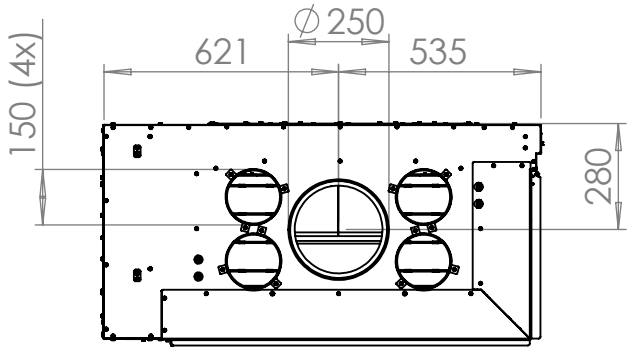

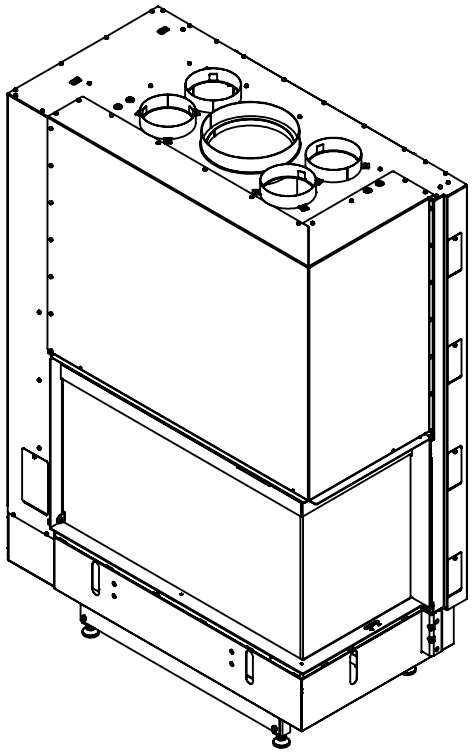

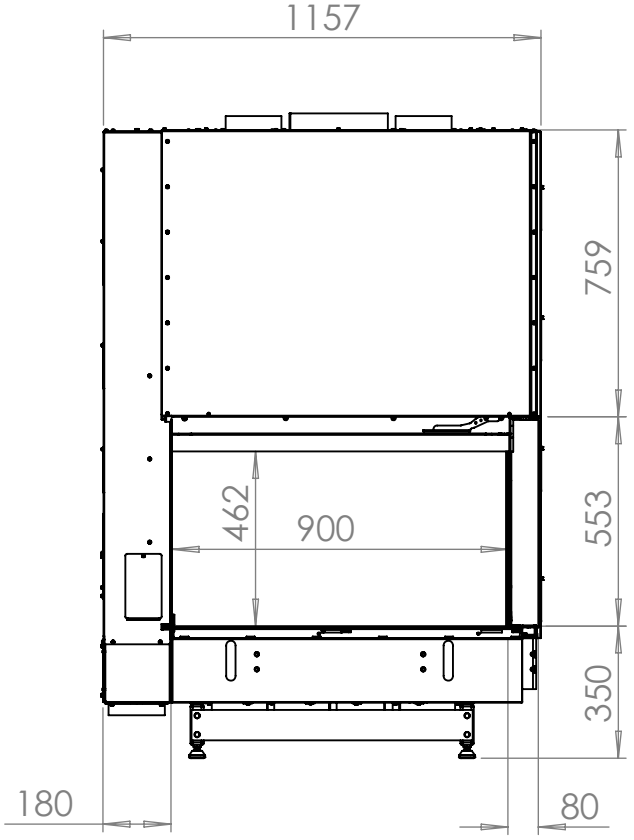

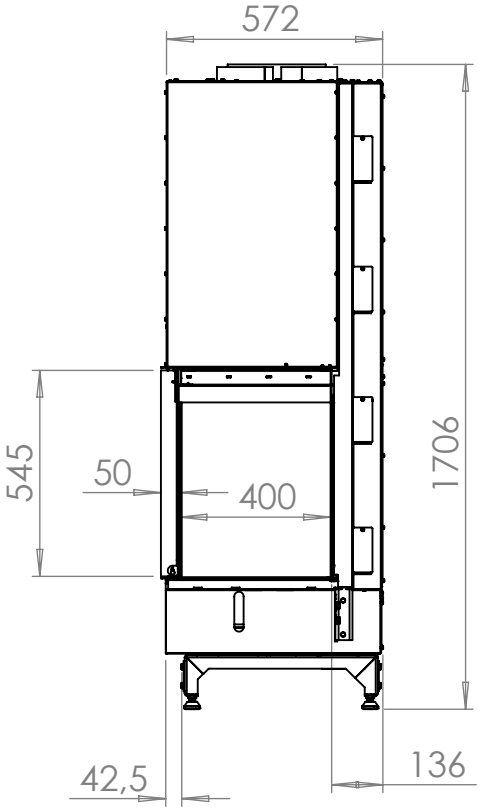

All dimensions in mm. Modifications under reserve.

18-6-2020 sheet 1 / 6

© All rights reserved. This drawing is sole property of Kal-fire. No part of this drawing may be reproduced, or published, in any form or in any way without prior written permission from Kal-fire.

KALFIRE
FIREPLACES

W90 47CR
4mm Kader

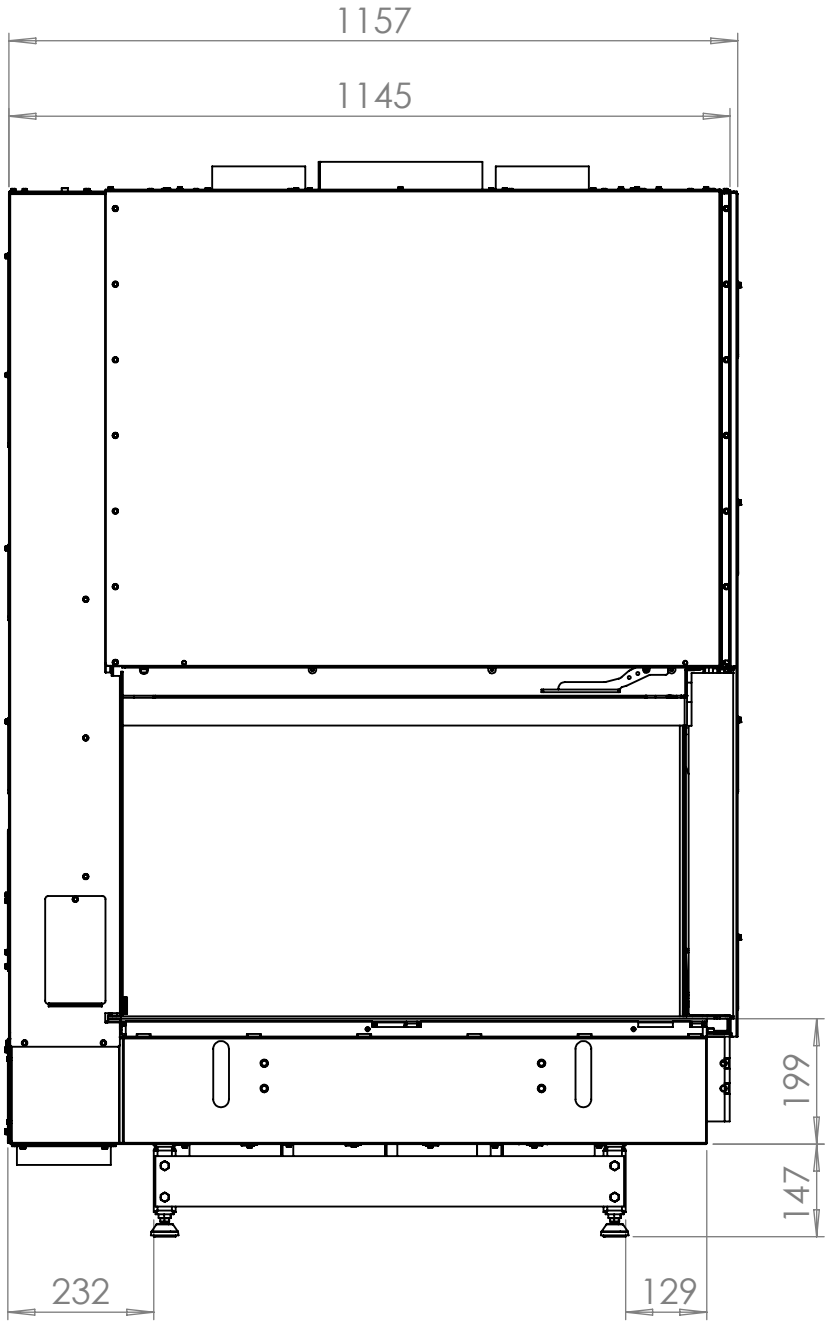

All dimensions in mm. Modifications under reserve.

18-6-2020 sheet 2 / 6

© All rights reserved. This drawing is sole property of Kal-fire. No part of this drawing may be reproduced, or published, in any form or in any way without prior written permission from Kal-fire.

KALFIRE
FIREPLACES

W90 47CR
4mm Kader

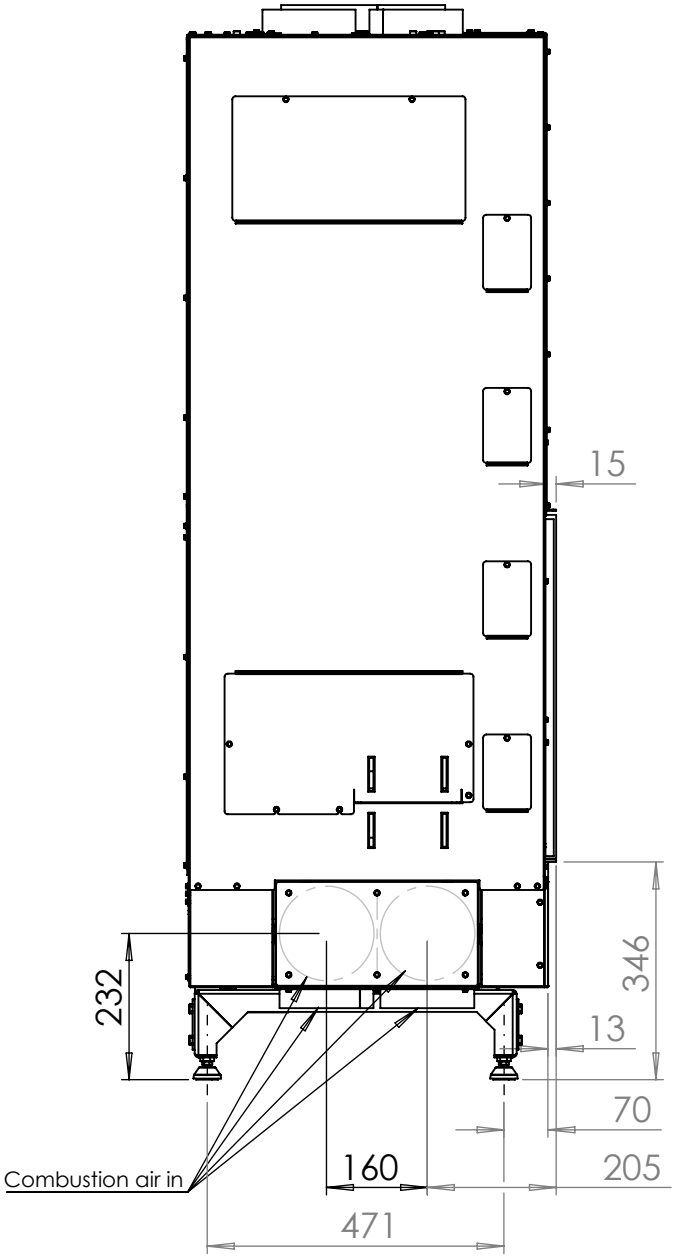

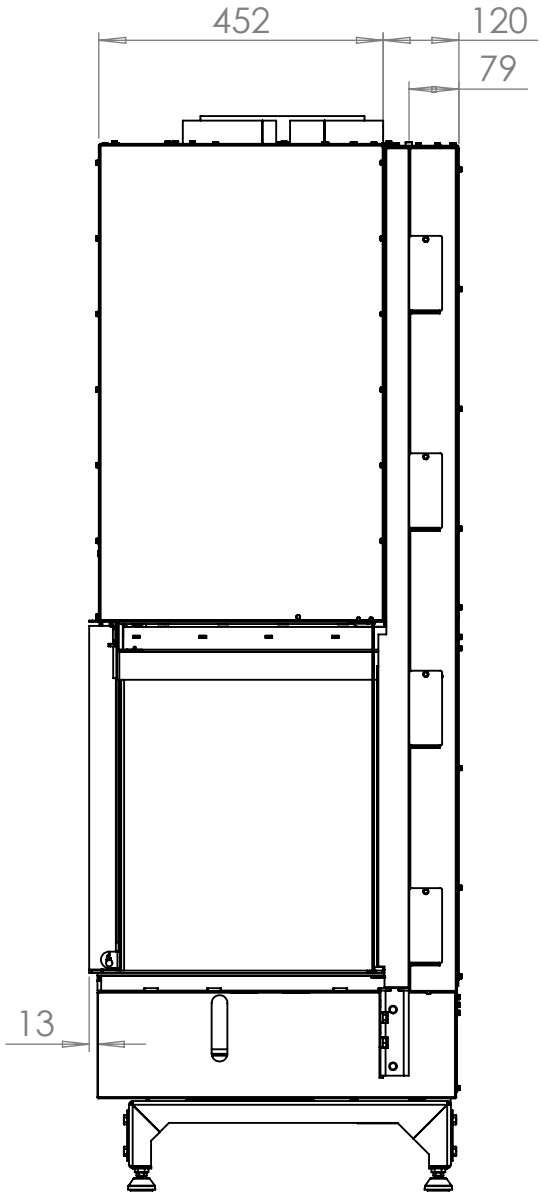

All dimensions in mm. Modifications under reserve.

18-6-2020 sheet 3 / 6

© All rights reserved. This drawing is sole property of Kal-fire. No part of this drawing may be reproduced, or published, in any form or in any way without prior written permission from Kal-fire.

KALFIRE
FIREPLACES

W90 47CR
4mm Kader

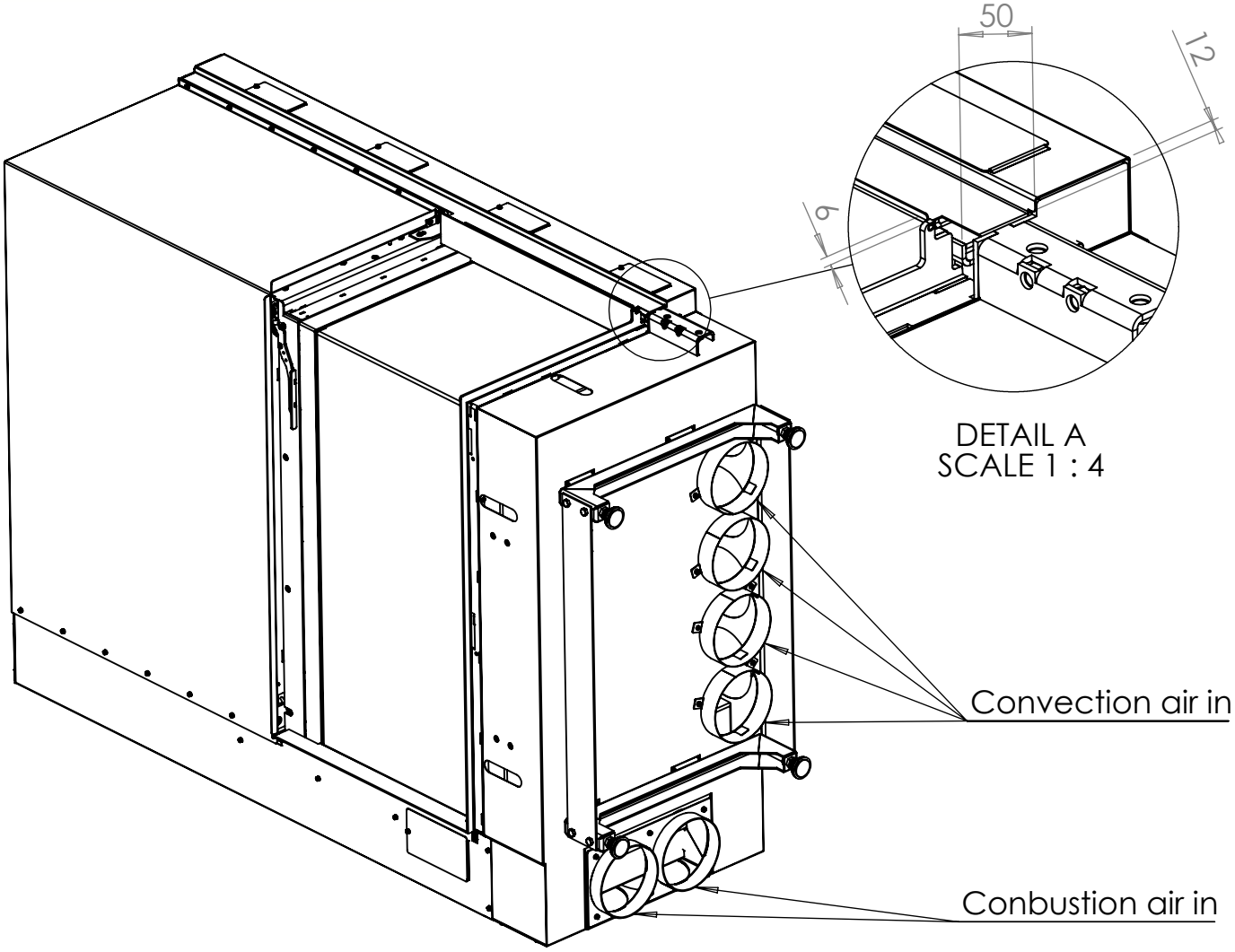

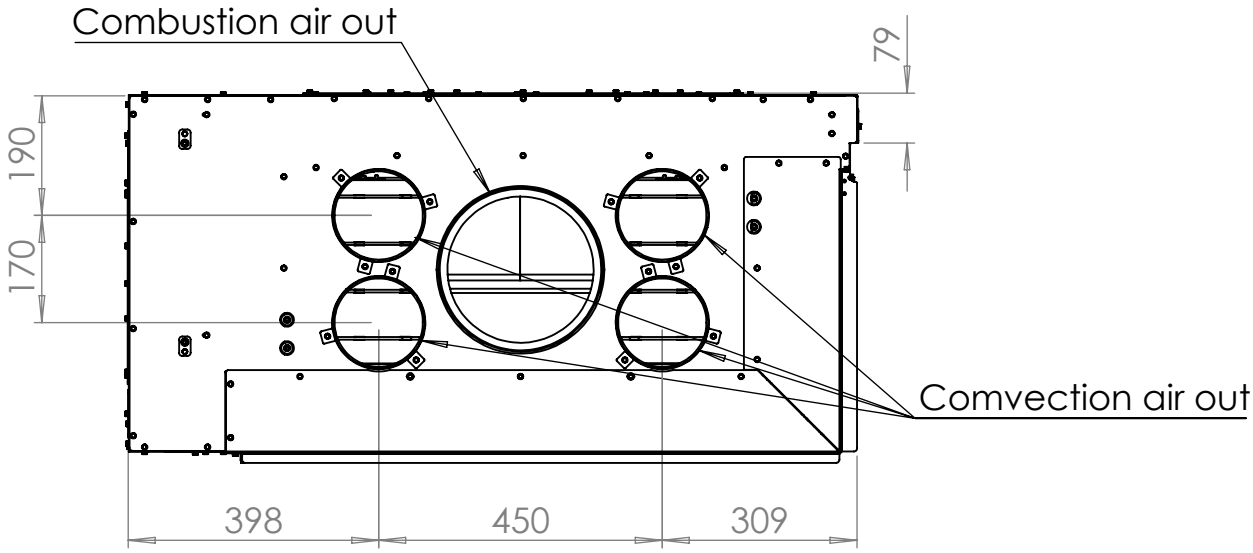

All dimensions in mm. Modifications under reserve. 18-6-2020 sheet 4 / 6

© All rights reserved. This drawing is sole property of Kal-fire. No part of this drawing may be reproduced, or published, in any form or in any way without prior written permission from Kal-fire.

KALFIRE
FIREPLACES

W90 47CR
4mm Kader

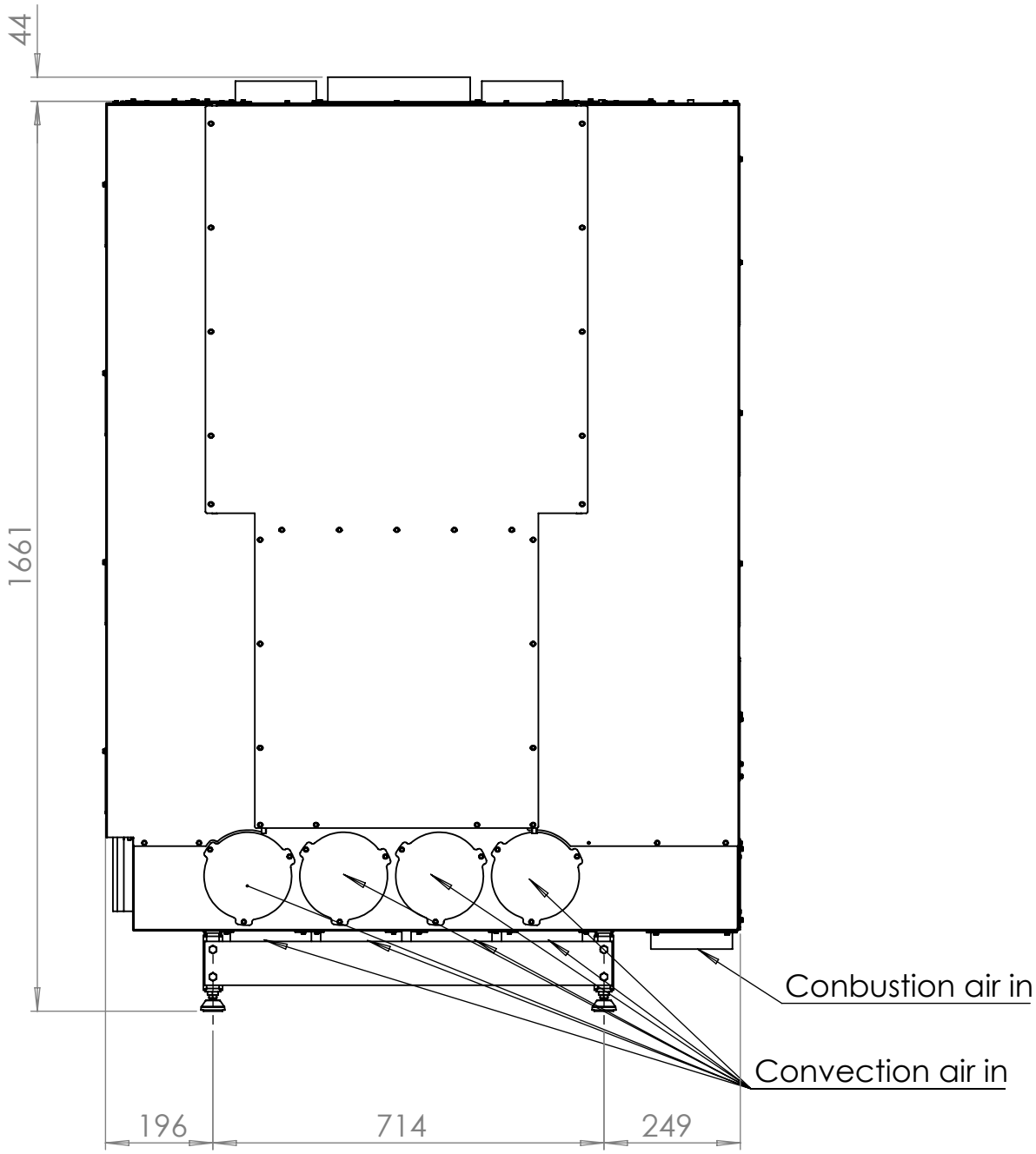

All dimensions in mm. Modifications under reserve.

18-6-2020 sheet 5 / 6

© All rights reserved. This drawing is sole property of Kal-fire. No part of this drawing may be reproduced, or published, in any form or in any way without prior written permission from Kal-fire.

KALFIRE
FIREPLACES

W90 47CR
8mm Kader

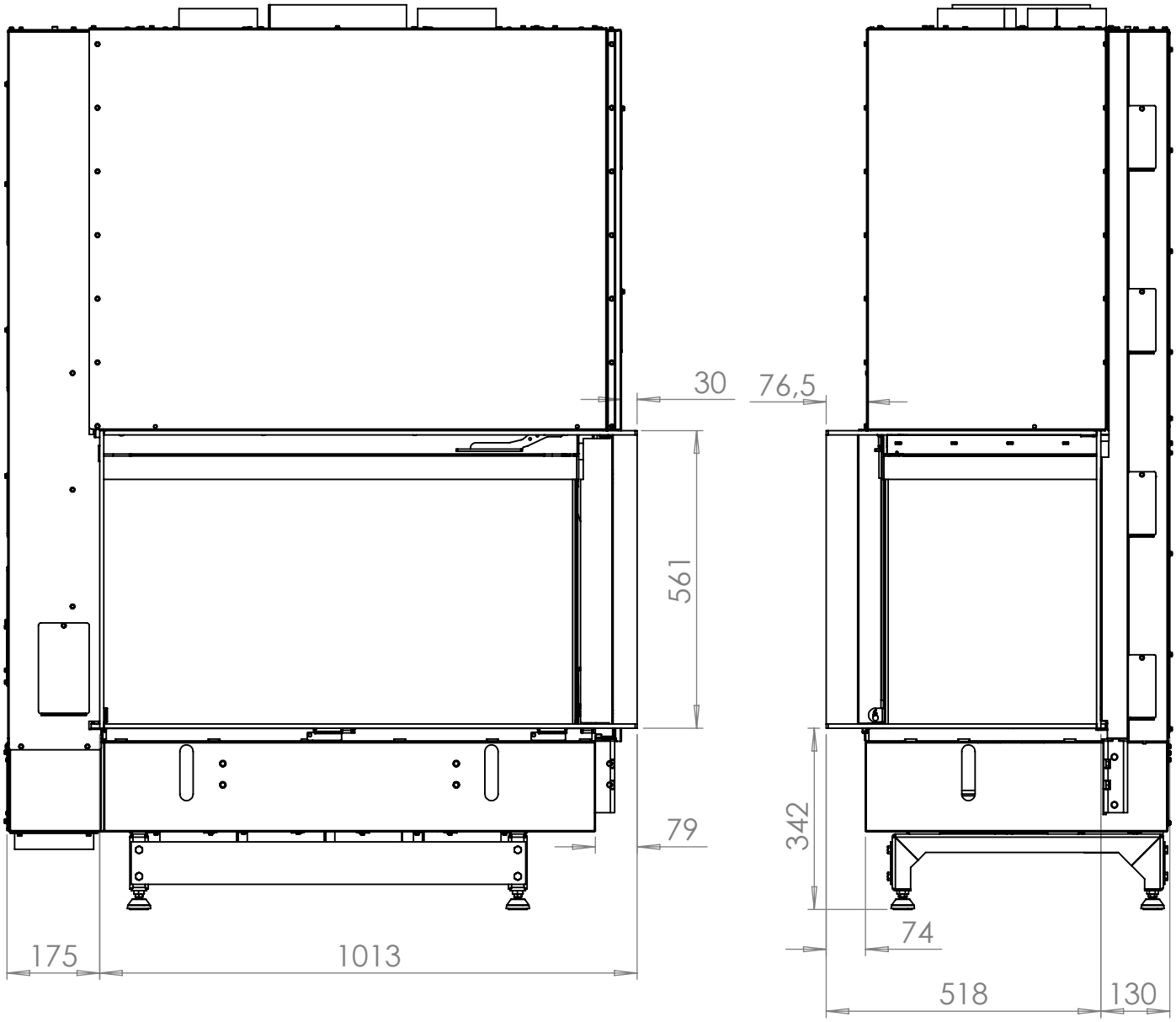

All dimensions in mm. Modifications under reserve.

18-6-2020 sheet 6 / 6

© All rights reserved. This drawing is sole property of Kal-fire. No part of this drawing may be reproduced, or published, in any form or in any way without prior written permission from Kal-fire.